HAL
open science

Image processing for studying size segregation in bedload transport: detection and tracking

Hugo Lafaye de Micheaux, Christophe Ducottet, Philippe Frey

To cite this version:

Hugo Lafaye de Micheaux, Christophe Ducottet, Philippe Frey. Image processing for studying size segregation in bedload transport: detection and tracking. European Geosciences Union, Apr 2018, Vienne, Austria. ujm-01767541

HAL Id: ujm-01767541

https://ujm.hal.science/ujm-01767541v1

Submitted on 16 Apr 2018

HAL is a multi-disciplinary open access archive for the deposit and dissemination of scientific research documents, whether they are published or not. The documents may come from teaching and research institutions in France or abroad, or from public or private research centers.

L'archive ouverte pluridisciplinaire **HAL**, est destinée au dépôt et à la diffusion de documents scientifiques de niveau recherche, publiés ou non, émanant des établissements d'enseignement et de recherche français ou étrangers, des laboratoires publics ou privés.

IMAGE PROCESSING FOR STUDYING SIZE SEGREGATION IN BEDLOAD TRANSPORT

DETECTION AND TRACKING

Hugo Lafaye de Micheaux[1,2]* , **Christophe Ducottet[1]** and **Philippe Frey[2]**

[(1)] Université de Lyon, UJM-Saint-Etienne, CNRS, UMR5516, Laboratoire Hubert Curien F-42023 Saint-Etienne, France
[(2)] Univ. Grenoble Alpes, Irstea, UR ETGR, 2 rue de la Papeterie-BP 76, F-38402 St-Martin-d'Hères, France *E-mail: hugo.lafaye-de-micheaux@irstea.fr

1. Context and objectives

Global aim: studying bedload transport thanks to experiments with two-size beads in a water flow.

Main objective: track beads over long time sequences to better understand size segregation responsible for complex morphology structures.

The idea: propose an **online particle filter-based tracking algorithm** (framework from [2])

1. Include **adapted multiple motion models** with known mechanical dynamics to anticipate bead locations.
2. Introduce an observation model from a conditional likelihood to handle detection errors.

2a. Experimental setup

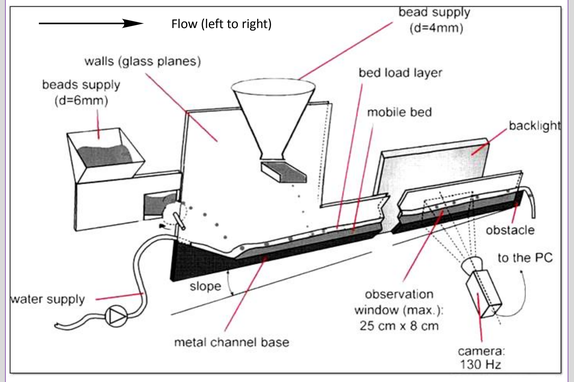

Experimental arrangement sketch (modified from [1])

2b. Tracking & bedload transport

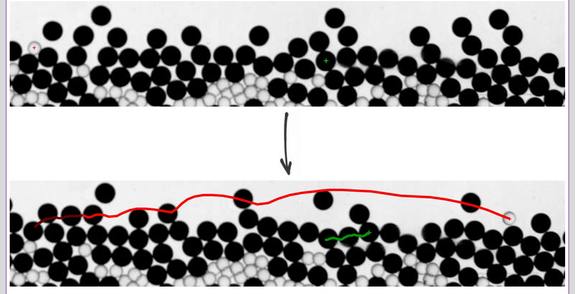

Example of 2 trajectories from the experiment

Tracking bedload sediment transport to study:

- Velocities, concentrations, bedload granular rheology
- Size segregation and associated morphology

3. Multi-model tracking algorithm [3]

Stage 1: Object detector

- Use specific morphological operations (erosion, hconvex, cross-corr,…)
- Measure motion states based on neighborhood and velocities
- Return observation state $z_t = \{x_t^{obs}, u_t^{obs}, s_t^{obs}\}$

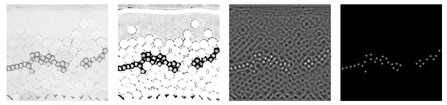

Transparent bead detection procedure

Stage 2: Data association

- Perform greedy algorithm on best matching combinations

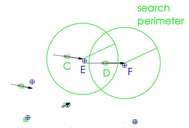

Search perimeter depends on motion model

Stage 3: Particle filtering

Objective: Estimate state $c_t = \{x_t, u_t, s_t\}$ of targets according to observations z_t
1 target ⇨ cloud of *N* particles , 1 particle ⇨ 1 state $c_t^i = \{x_t^i, u_t^i, s_t^i\}$

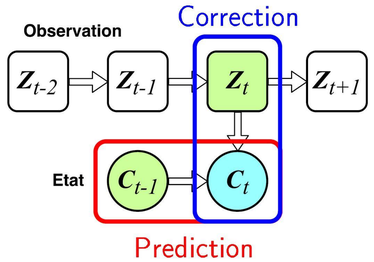

Based on a **Sequential Monte Carlo approach (SMC)** and a **Markov Chain**:

1. Prediction: predict target state according to evolution model on particles
   - 3 motion models based on bedload dynamics:
     - Resting - *not moving* - $(x,y)_t = (x,y)_{t-1} + \varepsilon_{rest}^{(x,y)}$
     - Rolling - *sliding on others* - $(x,y)_t = (x,y)_{t-1} + (u,0)_{t-1}\Delta t + \varepsilon_{roll}^{(x,y)}$
     - Saltating - *bouncing on others* - $(x,y)_t = (x,y)_{t-1} + (u,v)_{t-1}\Delta t + \varepsilon_{salt}^{(x,y)}$
2. Correction: correct predicted state thanks to observations
   - Particle importance weighting $w_t^i = p(z_t|c_t^i) = \underbrace{p(x_t^{obs}|x_t^i)}_{\text{vrais. position}} \cdot \underbrace{p(u_t^{obs}|u_t^i)}_{\text{vrais. velocity}} \cdot \underbrace{p(s_t^{obs}|s_t^i)}_{\text{vrais. motion state}}$
   - Normalize weights and resample particles
3. Final target state estimation by averaging resampled particles

4. Example of tracking results

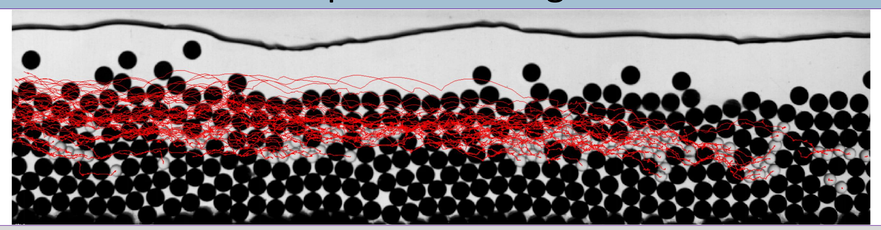

5. Conclusions & Perspectives

- **New online particle filter-based tracking algorithm based on multiple dynamic models**:
  - **Input of object mechanical dynamics** helps approaching real trajectories.
  - Allows studying bedload transport with high confidence.

Perspectives : apply to long sequences of sediment transport to study high and lower frequency phenomena

Acknowledgements

This research is funded by Irstea, labex OSUG@2020, the French national research agency project SegSed ANR-16-CE01-0005 and the Rhône-Alpes region as part of its higher education, research and innovation regional Strategy (Environment Academic Research Community).

References

[1] Hergault, V., Frey, P., Métivier, F., Barat, C., Ducottet, C., Böhm, T. & Ancey, C. (2010). Image processing for the study of bedload transport of two-size spherical particles in a supercritical flow. *Experiments in fluids, 49*, 1095-1107.

[2] Isard, M. & Blake, A. (1998). A mixed-state condensation tracker with automatic model-switching. *IEEE ICCV*, 107-112.

[3] Lafaye de Micheaux, H., Ducottet, C. & Frey, P. (2018). Multi-model particle filter-based tracking with switching dynamical state to study bedload transport. *Accepted by journal Machine Vision and Applications, Springer*.